VEGETABLE PREPARATION MACHINE

robot coupe

CL 40

D	
Number of meals per service	**20 to 80**
Theoretical output per hour*	Up to 200 kg/h

28 DISCS

3 Dicing
2 French Fries

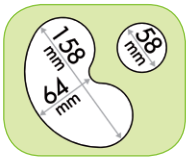

A SALES FEATURES

CL40 Vegetable Preparation Machine is ideal for slicing, ripplecutting, grating, dicing, shredding and making french fries from all types of fruit and vegetables, as well as grating cheese.

B TECHNICAL FEATURES

CL40 Vegetable Preparation Machine – Single-phase 230V/50/1. Power 500 W. Speed 500 rpm. Equipped with a magnetic safety system, motor brake and lever-activated auto restart. This Veg. Prep. Machine has a lateral ejection facility and is equipped with 2 hoppers: 1 large capacity hopper diameter: 104 cm²; loading volume - 1.56 litres, and 1 cylindrical hopper Ø 58 mm. Stainless steel vegetable bowl. All parts in food contact can be cleaned in the dishwasher. Suitable for 20 to 80 meals per service. No discs included. Complete choise of 28 discs in option.

Select all the options under paragraph F on the reverse side.

C TECHNICAL DATA

Output power	500 Watts	
Electrical data	Single-phase - plug included	
Speed	500 rpm	
Dimensions (WxDxH)	345 x 303 x 590 mm	
Rate of recyclability	95%	
Net weight	16 kg	
Supply	**Amperage**	**Reference**
230V/50/1	5.4	24572

STANDARDS

EN 12100-1 and 2 - 2004, EN 60204- 1 - 2006, EN 1678 - 1998, EN 60529-2000: IP 55, IP 34.

ETL LISTED 9900098 Conforms to UL NSF/ANSI Std 763 Std 8 Certified to CAN/CSA Std C22.2 No.195

E PRODUCT FEATURES / BENEFITS

MOTOR BASE

- Industrial induction motor for intensive use.
- Power - 500 Watts.
- Metal motor base.
- Stainless steel motor shaft.
- Magnetic safety system with motor brake.
- Speed - 500 rpm

VEGETABLE PREPARATION FUNCTION

- Vegetable Preparation Machine equipped with 2 hoppers: 1 half-moon hopper to cut bulky vegetables, like cabbage, celeriac, etc. and 1 cylindrical hopper for long, delicate vegetables.
- Capability to dice and make french fries.
- Stainless steel bowl and removable lid.
- Reversible ejector disc for processing delicate produce.
- Lateral ejection facility for space-saving and greater user comfort, and accommodates 200 mm high gastronorm pans
- Lever-activated auto restart (by the pusher)
- Vertical pusher pressure exerted on vegetables to ensure uniform cuts.
- Large choice of 28 discs in option.
- Discs are made from stainless steel (except dicing discs and french fries discs).
- No discs included.

* Depend on the type of the hopper used, the choice of the cut and the organisation of the workstation.

CL 40

F OPTIONAL ACCESSORIES

- Wall 8-disc holder - ref 107812
- D-Clean Kit : ref. 39881 cleaning tool for dicing grids 8 mm and 10 mm.

SUGGESTED PACKS OF DISCS

Pack of 6 discs Ref 1945	slicers 2 mm, 4 mm; grater 2 mm; julienne 4x4 mm; dicing equipment : slicer 10 mm + dicing grid 10x10 mm.
Pack of 8 discs Ref 1908	slicers 2 mm, 4 mm; grater 2 mm; julienne 2x2 mm , 2x4 mm, 4x4 mm; dicing equipment: slicer 10 mm + dicing grid 10x10 mm.

DICING EQUIPMENT	
1 mm	27051
2 mm	27555
3 mm	27086
4 mm	27566
5 mm	27087
6 mm	27786

RIPPLE CUT SLICERS	
2 mm	27621

GRATERS	
1.5 mm	27148
2 mm	27149
3 mm	27150
6 mm	27046
9 mm	27632
Parmesan	27764
Röstis potatoes	27191
Horseradish paste 0.7 mm	27078
Horseradish paste 1 mm	27079
Horseradish paste 1.3 mm	27130

JULIENNE	
2x4 mm	27080
2x6 mm	27081
2x2 mm	27599
4x4 mm	27047
6x6 mm	27610
8x8 mm	27048

DICING EQUIPMENT	
8x8x8 mm	27113
10x10x10 mm	27114
12 x 12 x 12 mm	27298

FRENCH FRIES EQUIPMENT	
8x8 mm	27116
10x10 mm	27117

G DRAWINGS AND DIMENSIONS
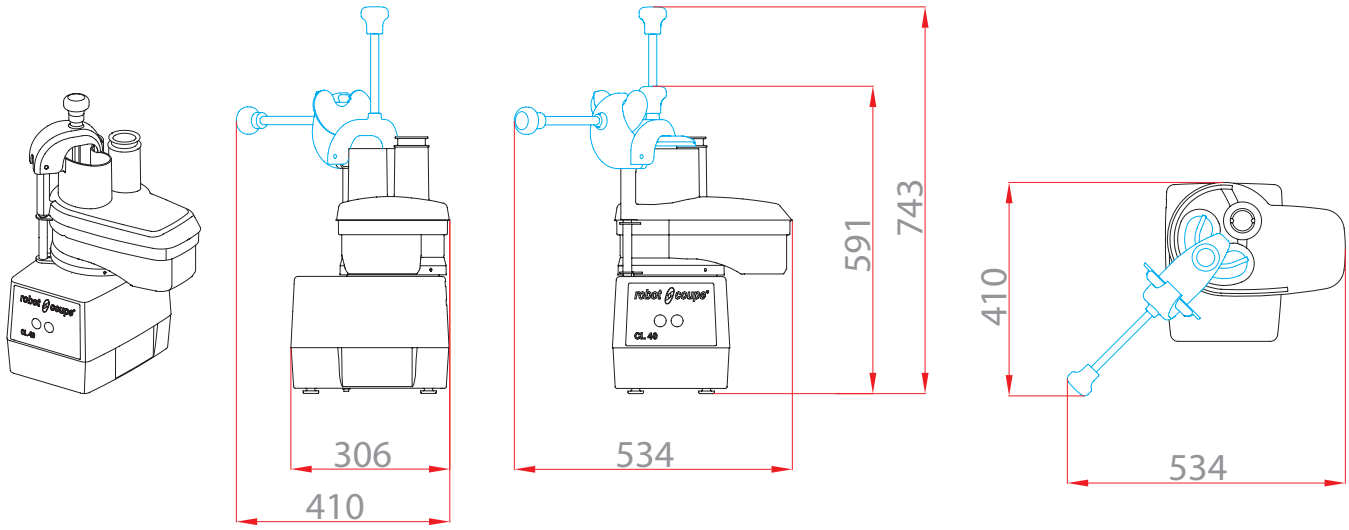
Single-phase - plug included